CUT	FITTED	CHECKED	WELDED

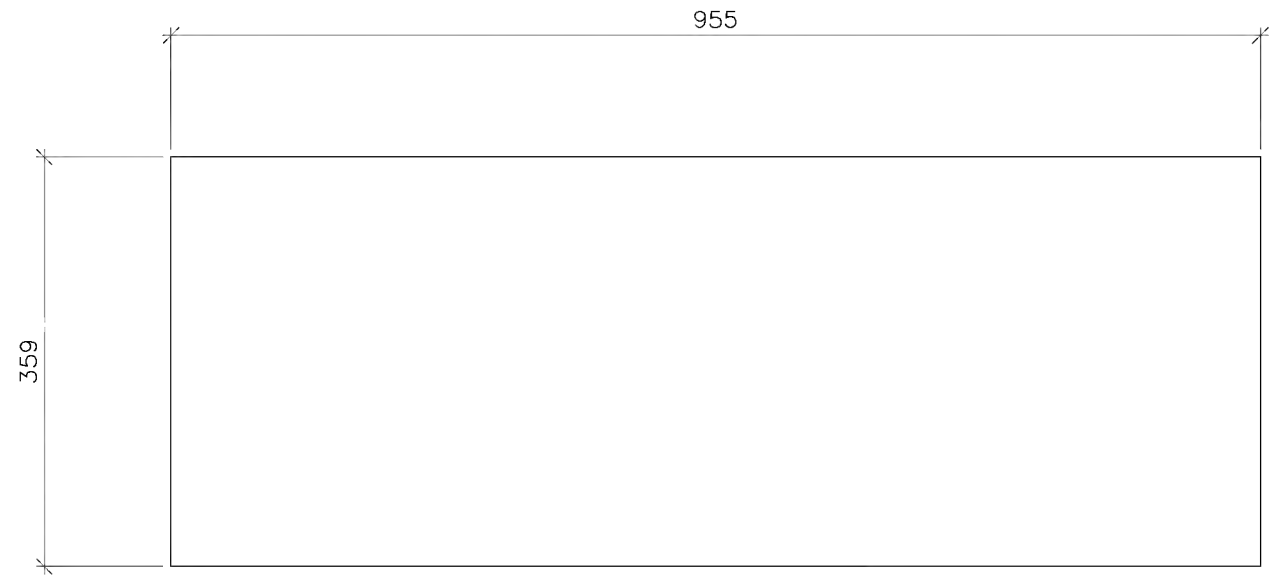

TOP VIEW

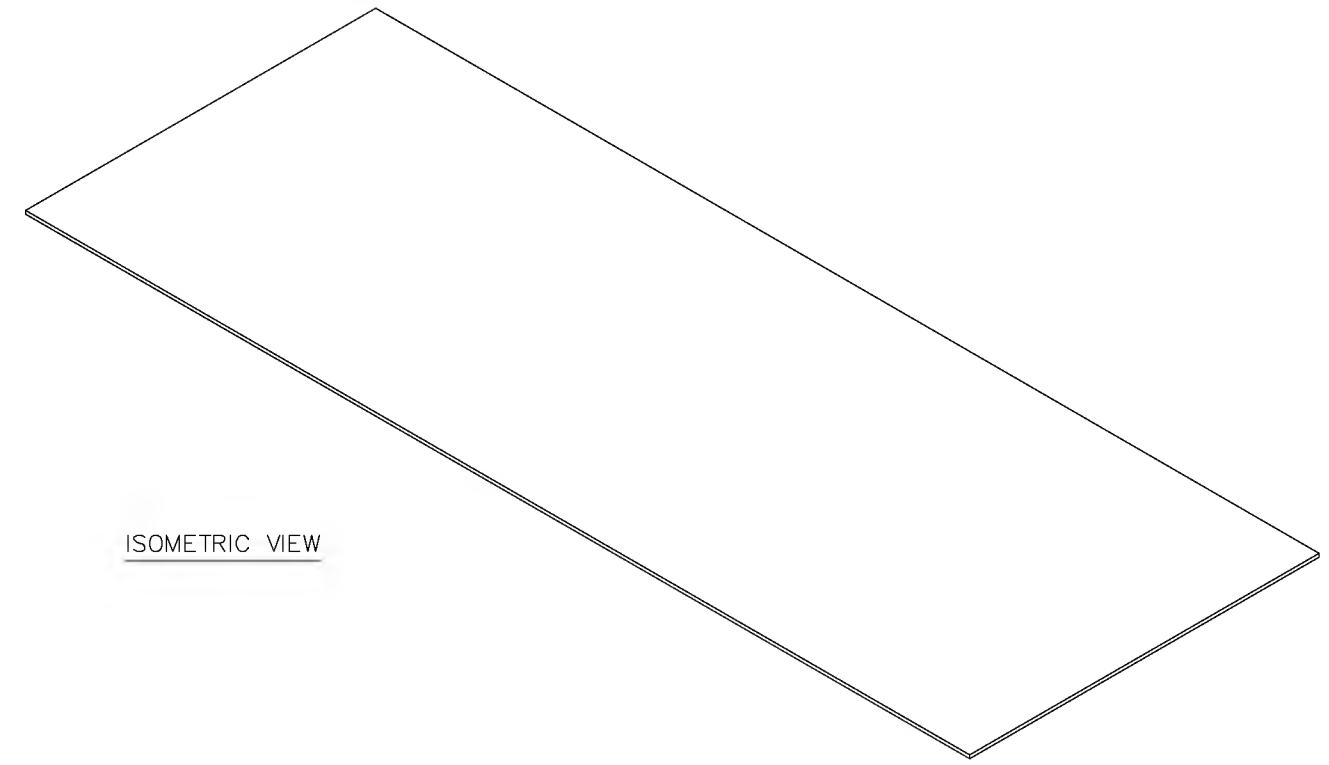

ISOMETRIC VIEW

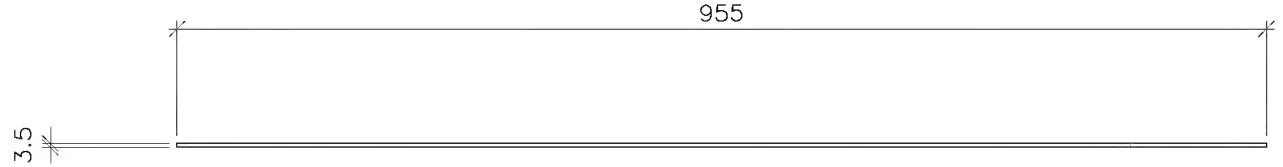

FRONT VIEW

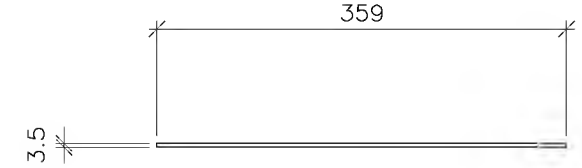

RIGHT SIDE VIEW

1 REQ'D (B)

MARK	QTY	DESCRIPTION	LENGTH	REMARKS	MARK	QTY	DESCRIPTION	LENGTH	REMARKS
B	ONE	PL 3.5mm 359	955						

QTY	TYPE	LEN

FIELD BOLTS

HOLES:

PAINT: No Paint

MAT. SPEC: 300W

NUMBER	DATE	BY	SUBJECT
–	May 2008	RMC	955mm Back Panel

DRAWN	DHM	22/11/06
CHK'D BY		
DWG REF		

CUSTOMER David H. Manz

PROJECT STEEL MOLD

Manz Engineering Ltd.
Alberta, Canada

JOB # 98054

DWG # 2

REV # 0

CUT	FITTED	CHECKED	WELDED

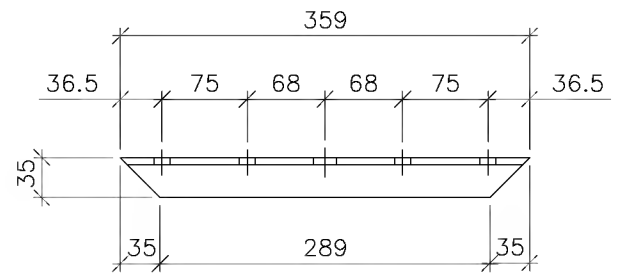

TOP VIEW

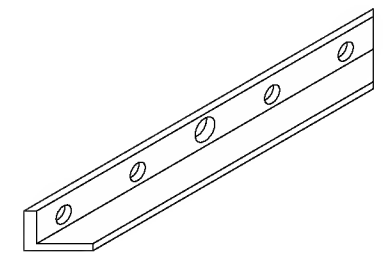

ISOMETRIC VIEW

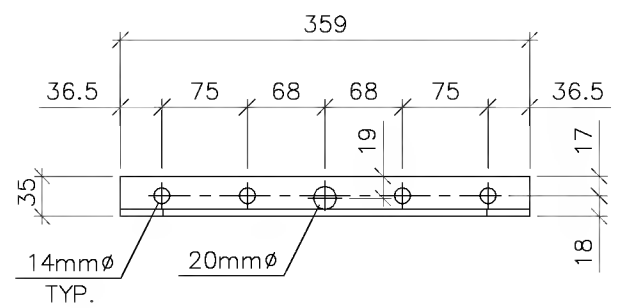

FRONT VIEW

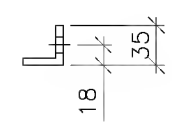

RIGHT SIDE VIEW

2 REQ'D (D)

MARK	QNT	DESCRIPTION	LENGTH	REMARKS	MARK	QNT	DESCRIPTION	LENGTH	REMARKS
D	2	L 35 x 35 x 6.35	359						

QNT	TYPE	LEN
	FIELD BOLTS	

HOLES: 14 & 20mm Dia

PAINT: No Paint

MAT. SPEC: 300W

NUMBER	DATE	BY	SUBJECT
–	May 2008	RMC	359mm Bottom Angle (Front & Back Panels)

DRAWN

CHK'D BY

DWG REF

CUSTOMER David H. Manz

PROJECT STEEL MOLD

Manz Engineering Ltd.
Alberta, Canada

JOB # 98054

DWG # 5

REV # 0

CUT	
FITTED	
CHECKED	
WELDED	

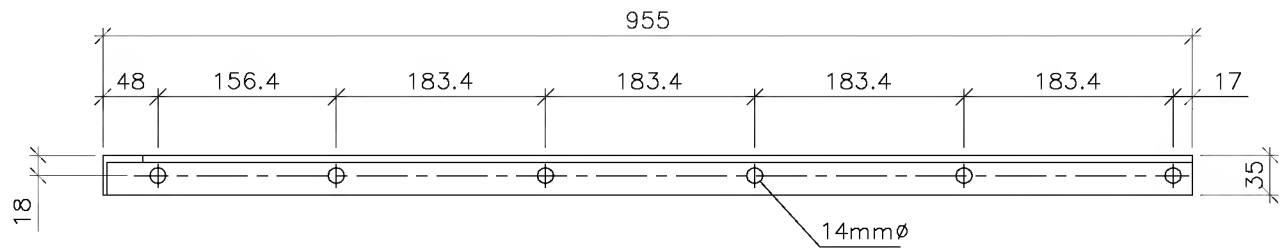

TOP VIEW

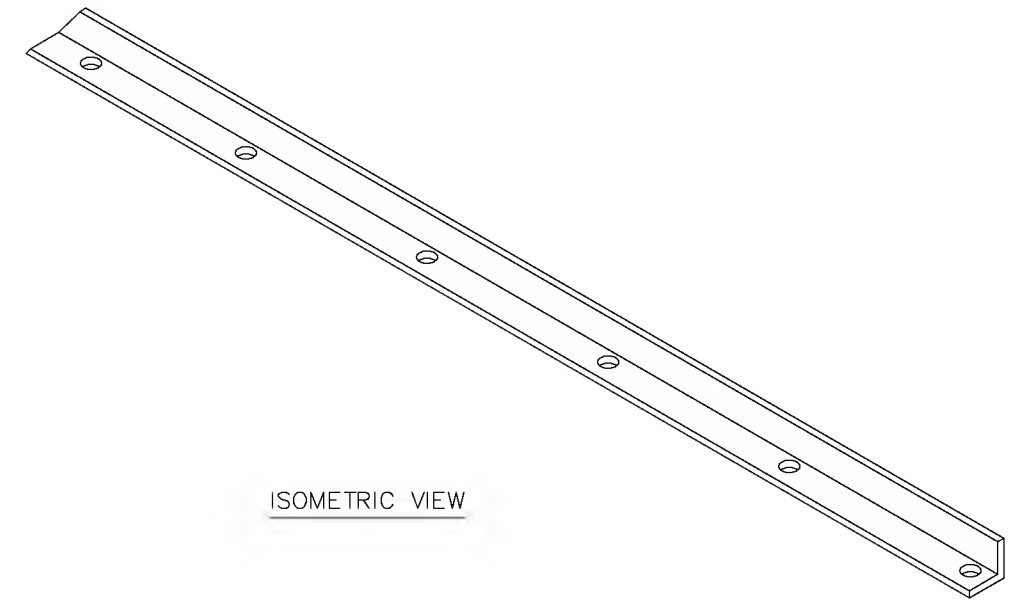

ISOMETRIC VIEW

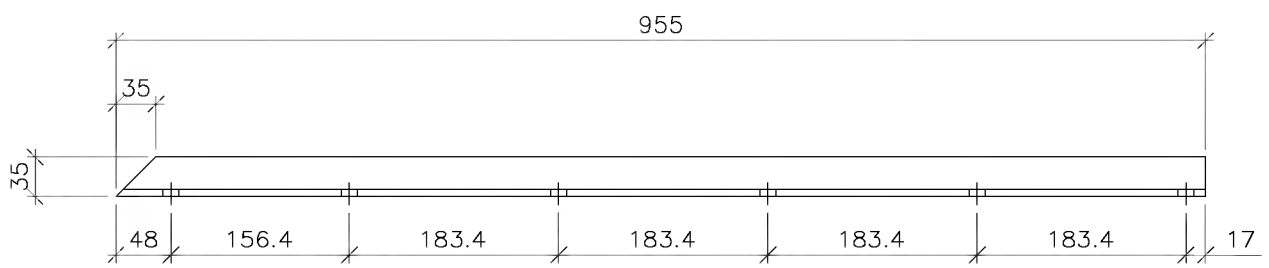

FRONT VIEW

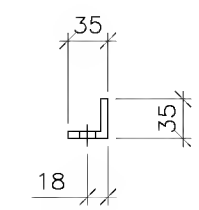

RIGHT SIDE VIEW

1 REQ'D (E1)

MARK	QTY	DESCRIPTION	LENGTH	REMARKS	MARK	QTY	DESCRIPTION	LENGTH	REMARKS
E1	1	L 35 x 35 x 5.35	955						

QTY	TYPE	LEN
	FIELD BOLTS	

HOLES: 14 mm Dia

PAINT: No Paint

MAT. SPEC: 300W

NUMBER	DATE	BY	SUBJECT
–	May 2008	RMC	955mm Back Panel Angle1

DRAWN

CHK'D BY

DWG REF

CUSTOMER David H. Manz

PROJECT STEEL MOLD

Manz Engineering Ltd.
Alberta, Canada

JOB # 98054

DWG # 5

REV # 0

CUT	FITTED	CHECKED	WELDED

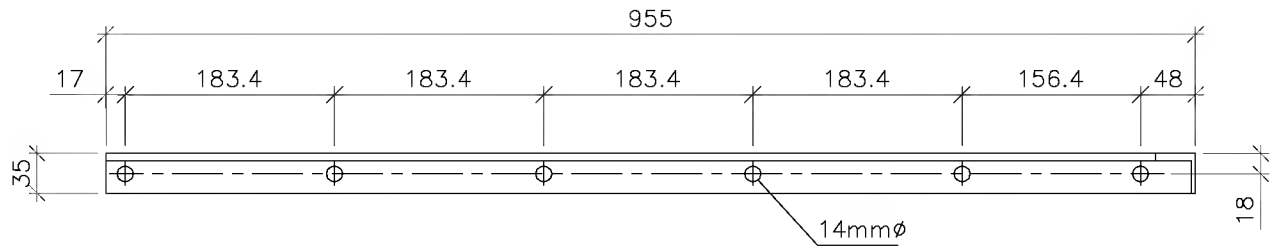

TOP VIEW

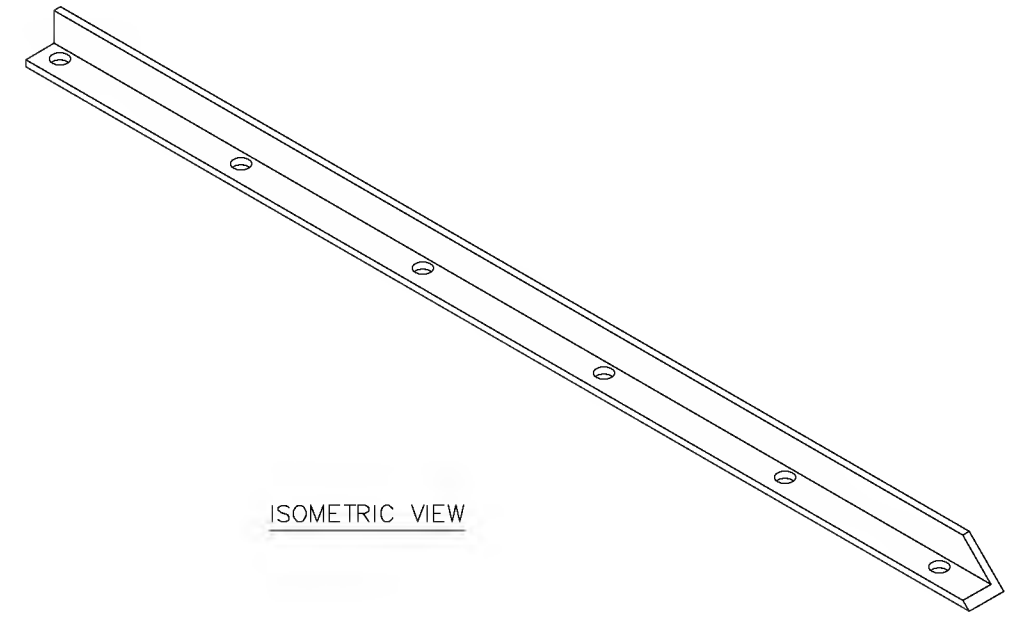

ISOMETRIC VIEW

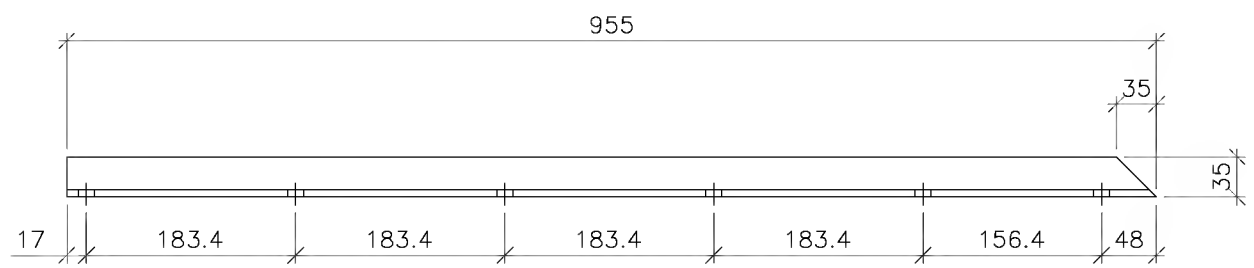

FRONT VIEW

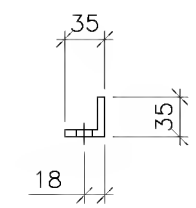

RIGHT SIDE VIEW

1 REQ'D (E2)

MARK	QTY	DESCRIPTION	LENGTH	REMARKS	MARK	QTY	DESCRIPTION	LENGTH	REMARKS
E2	1	L 35 x 35 x 6.35	955						

QTY	TYPE	LEN
	FIELD BOLTS	

HOLES: 14 mm Dia

PAINT: No Paint

MAT. SPEC: 300W

NUMBER	DATE	BY	SUBJECT
–	May 2008	RMC	955mm Back Panel Angle2

DRAWN

CHK'D BY

DWG REF

CUSTOMER David H. Manz

PROJECT STEEL MOLD

Manz Engineering Ltd.
Alberta, Canada

JOB # 98054

DWG # 5

REV # 0

CUT	FITTED	CHECKED	WELDED

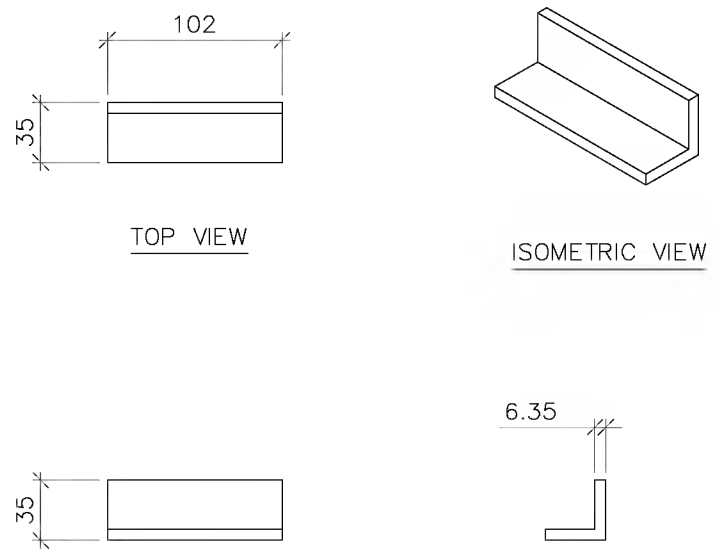

4 REQ'D (F)

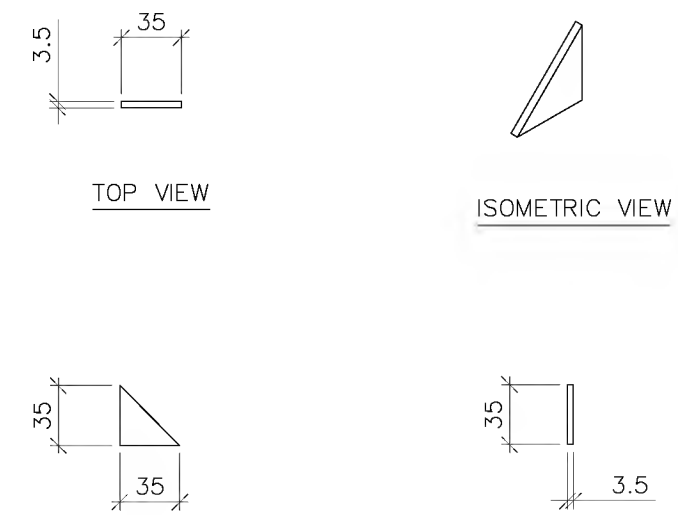

8 REQ'D (G)

MARK	QNT	DESCRIPTION	LENGTH	REMARKS	MARK	QNT	DESCRIPTION	LENGTH	REMARKS
F	4	L 35 x 35 x 6.35	102						
G	8	PL 3.5 x 35	35						

QNT	TYPE	LEN
	FIELD BOLTS	

HOLES: 14 mm Dia

PAINT: No Paint

MAT. SPEC: 300W

NUMBER	DATE	BY	SUBJECT
–	May 2008	RMC	Miscellaneous Steel Members

DRAWN

CHK'D BY

DWG REF

CUSTOMER David H. Manz

PROJECT STEEL MOLD

Manz Engineering Ltd.
Alberta, Canada

JOB # 98054

DWG # 5

REV # 0

CUT	FITTED	CHECKED	WELDED

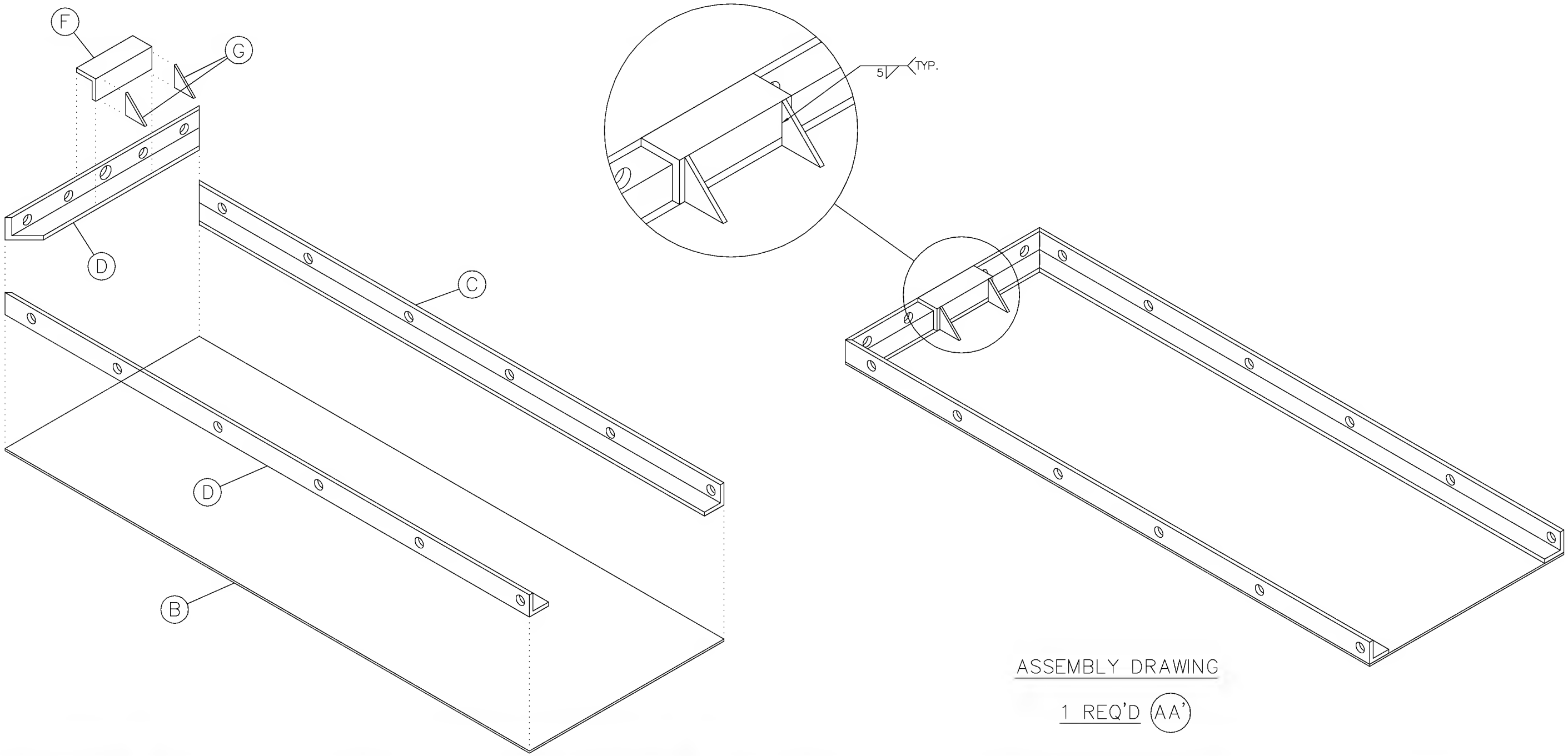

ASSEMBLY DRAWING

1 REQ'D (AA')

MARK	QNT	DESCRIPTION	LENGTH	REMARKS	MARK	QNT	DESCRIPTION	LENGTH	REMARKS
A	1	PL 3.5mm x 359	955						
D	1	L 35 x 35 x 6.35	359						
D1	1	L 35 x 35 x 6.35	955						
D2	1	L 35 x 35 x 6.35	955						
F	1	L 35 x 35 x 6.35	102						
G	2	L 3.5 x 35	35						

QNT	TYPE	LEN
	FIELD BOLTS	

HOLES: 14 mm Dia

PAINT: No Paint

MAT. SPEC: 300W

NUMBER	DATE	BY	SUBJECT
–	May 2008	RMC	Back Wall Panel AA'

DRAWN

CHK'D BY

DWG REF

CUSTOMER David H. Manz

PROJECT STEEL MOLD

Manz Engineering Ltd.
Alberta, Canada

JOB # 98054

DWG # 6

REV # 0